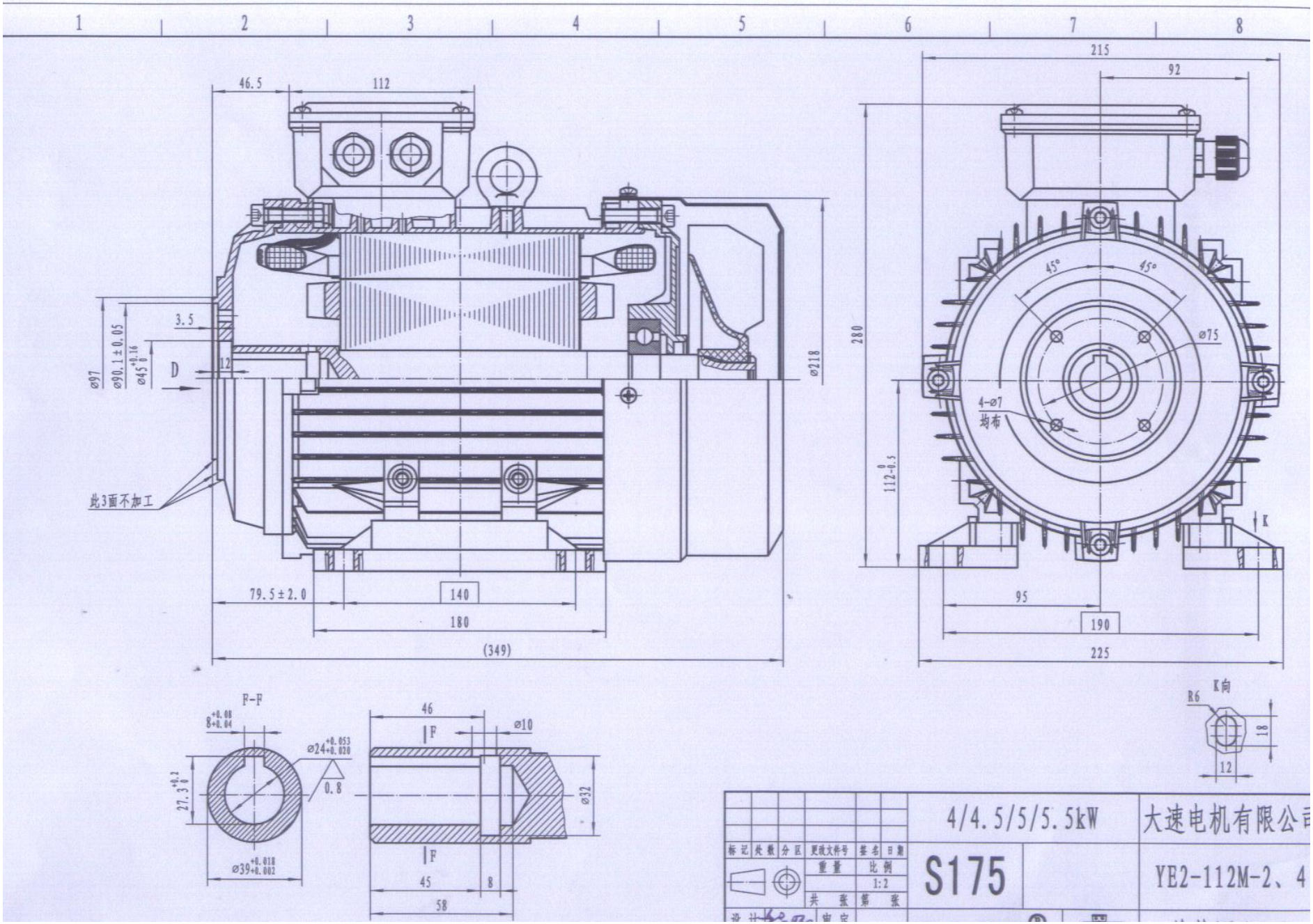Model 2. Y2 14400 (1901A SCHEME), 4KW-4pole, HOLLOW SHAFT, FLANGE HOLE DIA.=75MM, 28KGS
Model 3. Y2 14440 (1917A SCHEME), 4.4KW-4pole, HOLLOW SHAFT, FLANGE HOLE DIA.=75MM, 30KGS
Model 4. Y2 28500 (1874A SCHEME), 5KW-2pole, HOLLOW SHAFT, FLANGE HOLE DIA.=75MM 28.3KGS